Acquisition of Dense 3D Model Database for Robotic Vision

M. Zeeshan Zia, Ulrich Klank, Michael Beetz

TU München
Intelligent Autonomous Systems (IAS),
Institut für Informatik 9

Problem Statement

Q. How to detect and localize ‘unseen’ objects ?

Q. How to perform vision based manipulation of such objects?

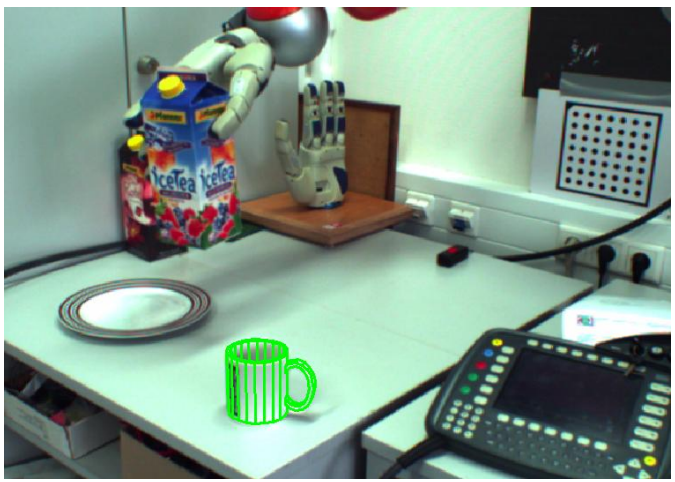

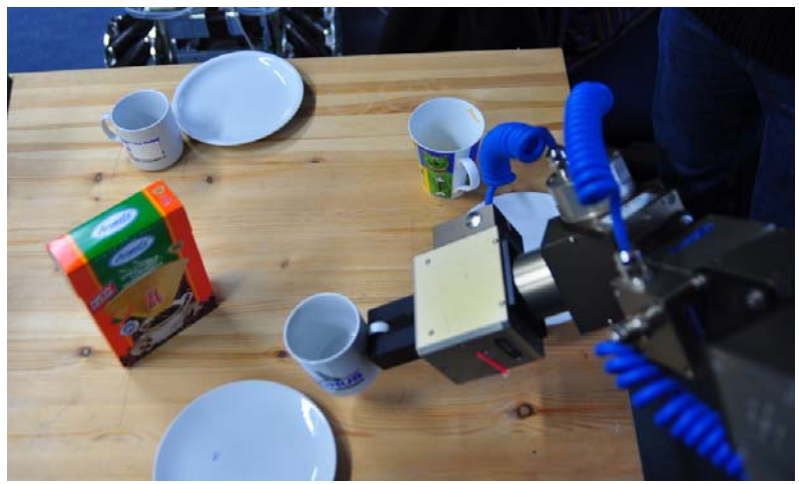

Problem Statement

Q. How to detect and localize ‘unseen’ objects ?

Q. How to perform vision based manipulation of such objects?

<u>Our answer:</u> Utilize huge amount of data available on internet.

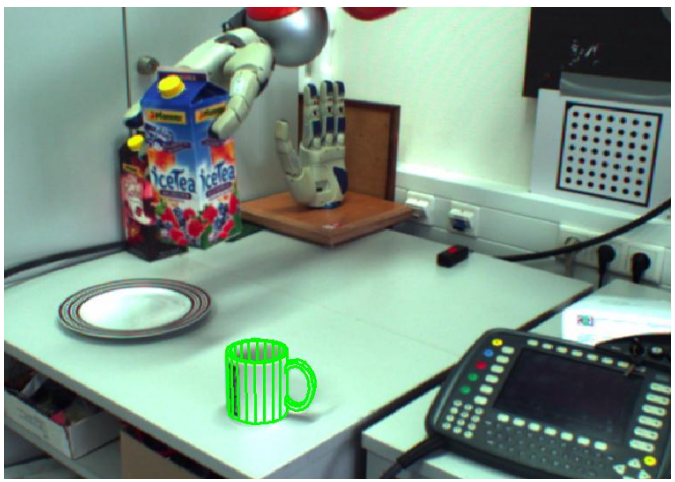

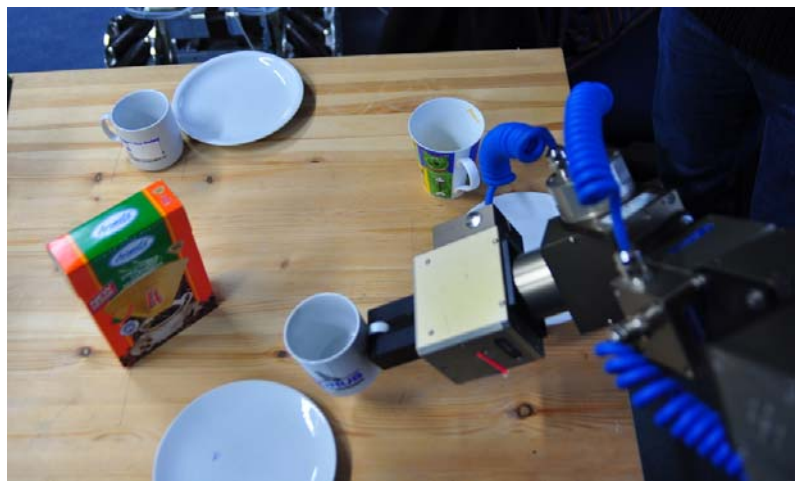

Challenges

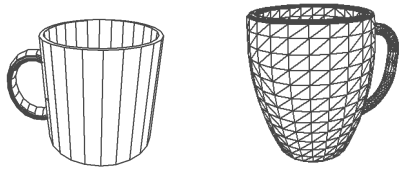

- Internet database:
  - Google's 3D Warehouse

- Problems:
  - Outliers
  - Insufficient number of models
  - Scaling and localization
  - Speed

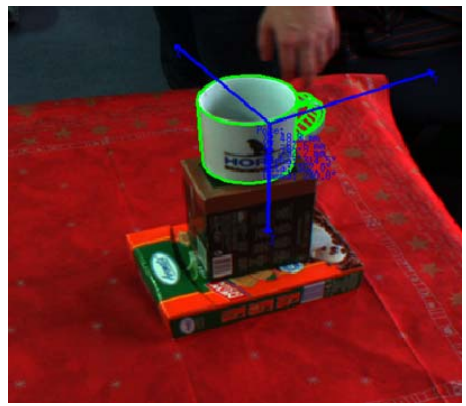

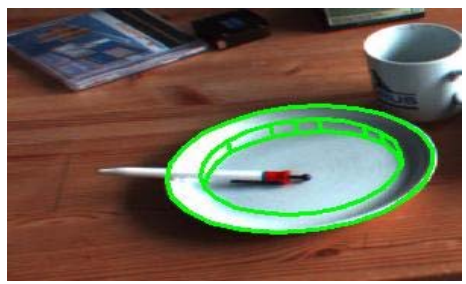

Contributions

- Automatic rejection of irrelevant models
- Creation of new models
- Setup for scale and location estimation
- Speeding up matching against images

Related Work

- Learning Object Categories from Google's Image Search (R. Fergus et al. ICCV'05)

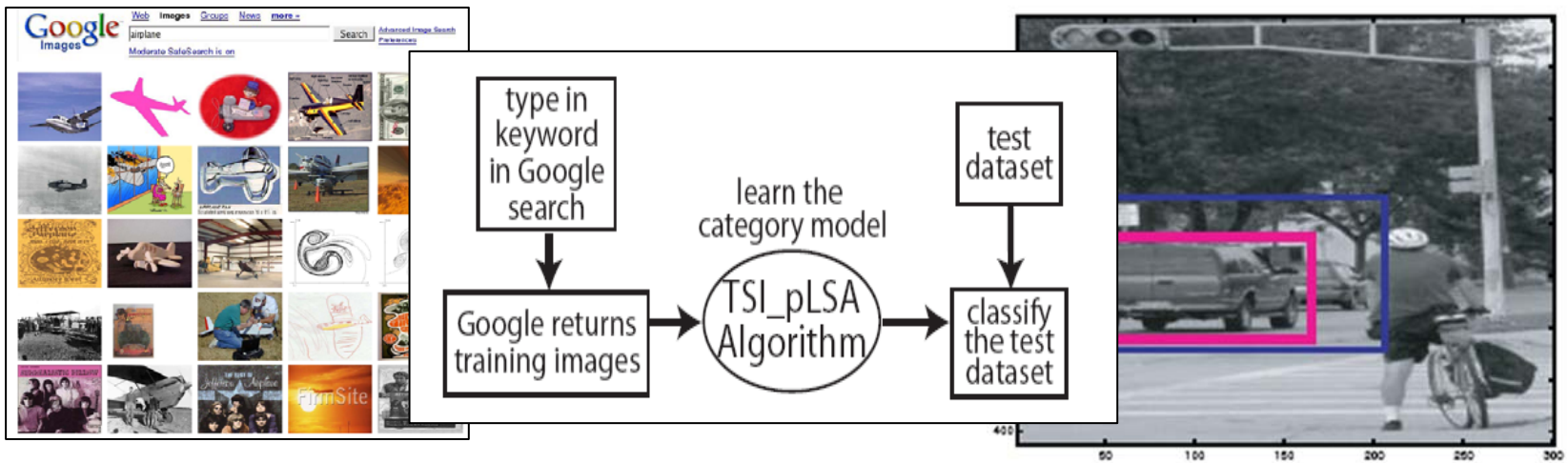

Related Work

- Learning Grasp Strategies with Partial Shape Information (Saxena et al. IJRR'08)

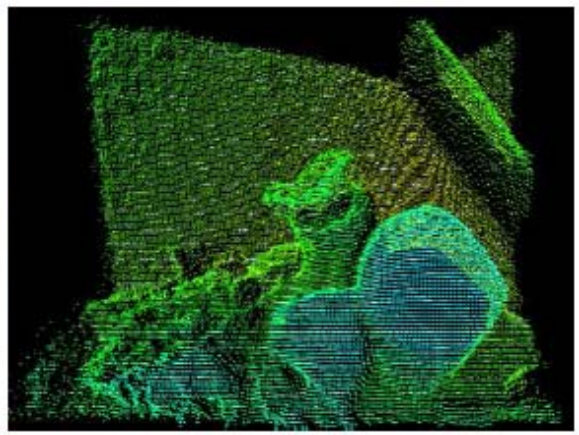

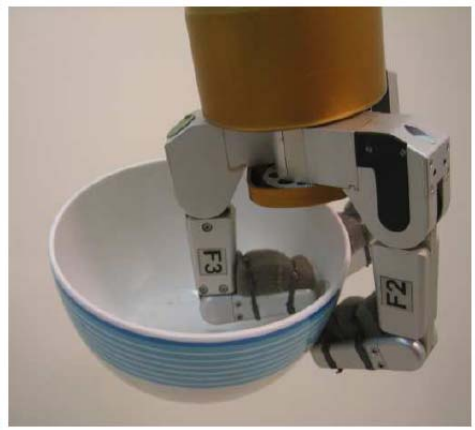

Related Work

- Recognition and Tracking of 3D Objects (Steger et al. DAGM'08)

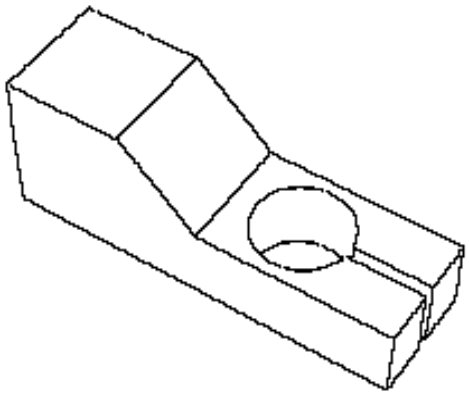

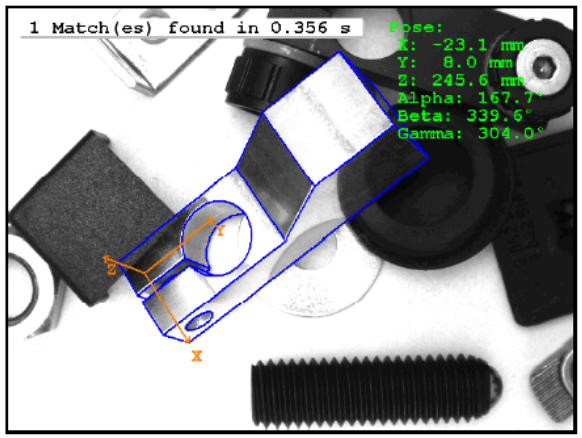

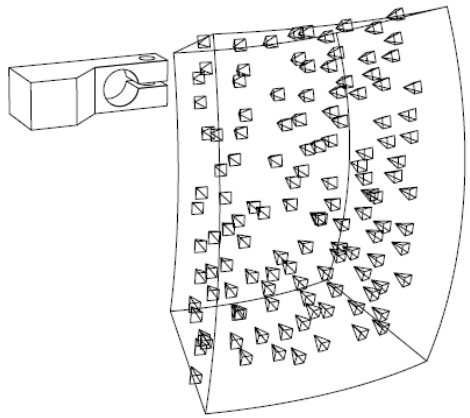

Related Work

- Morphing of 3D triangulated models (Kraevoy et al. SIGGRAPH'04)

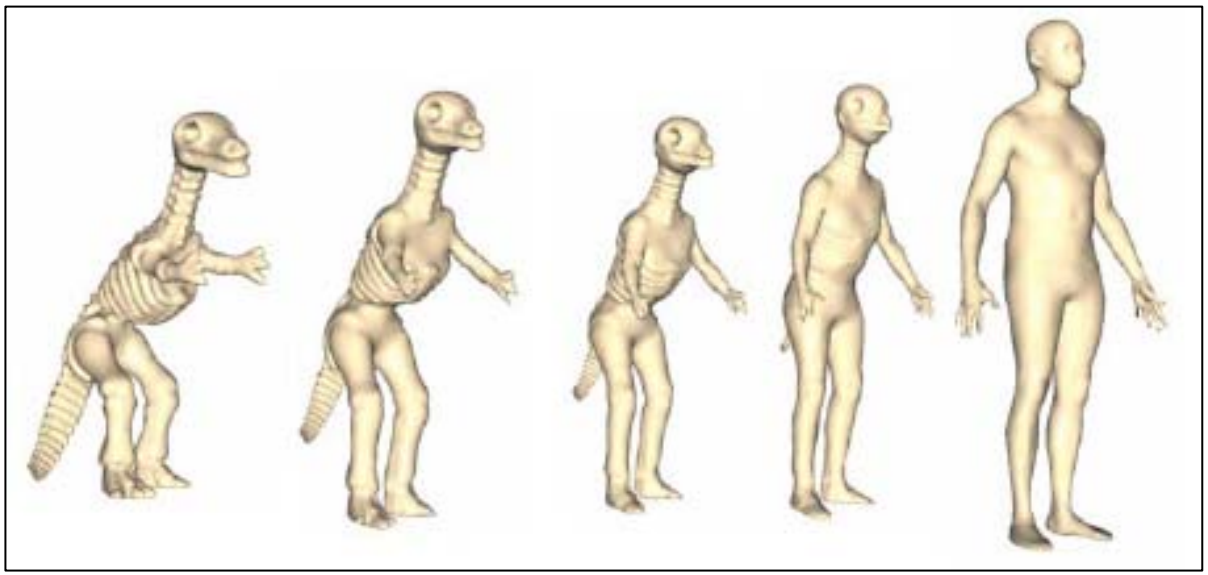

Outline

- Steps
  1. Internet Search
  2. Model Selection
  3. Model Specialization
  4. Visual Search
  5. Learning Step
- System Evaluation

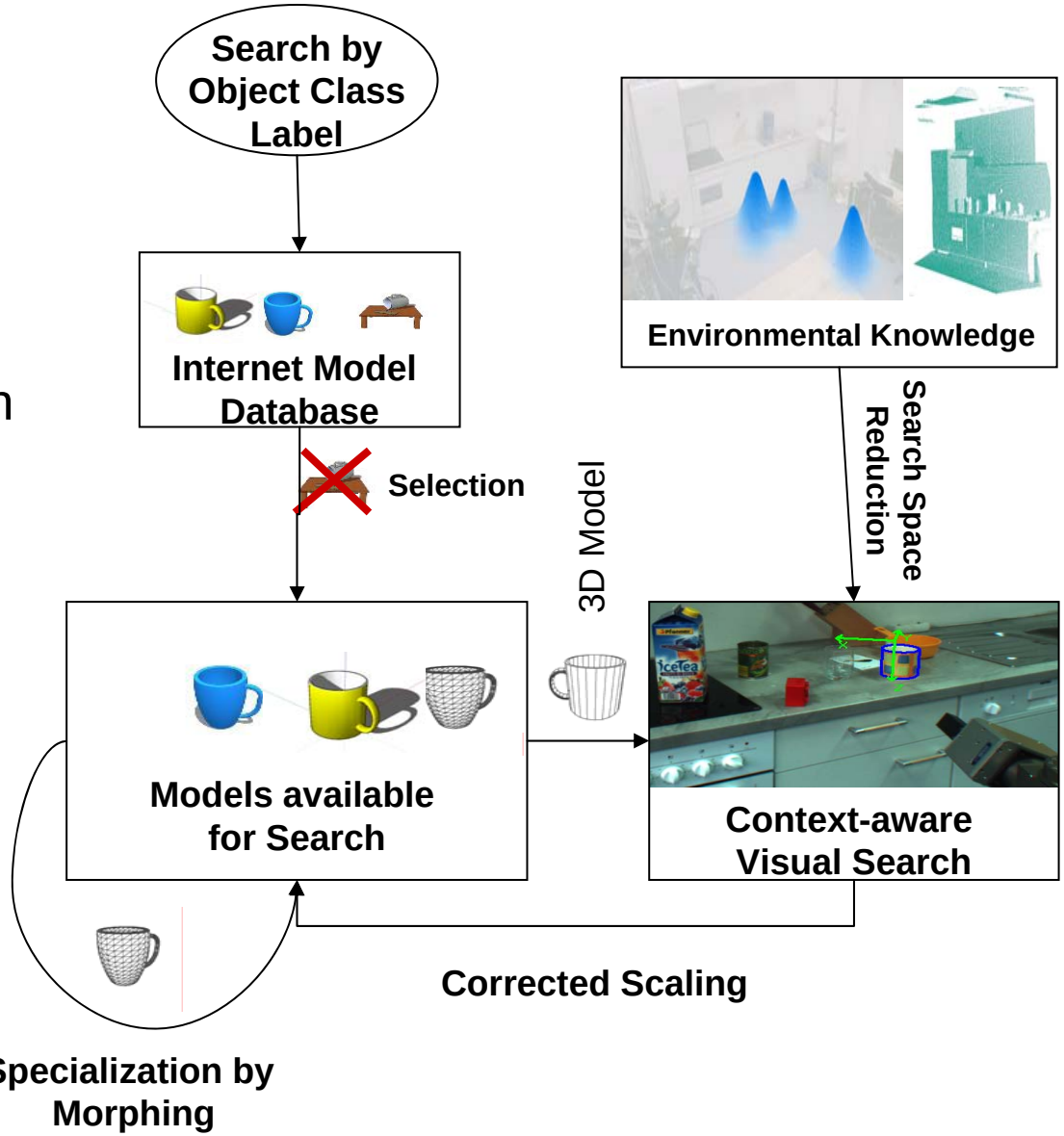

Model Selection

- Clustering (k-means, k=4),
- Distance measurements: χ^2 - distance over Shape distribution function (Osada et al. TOG'02):
  - Histogram of distances between randomly selected points
- Tested Alternatives: Rusu et. al. ICARCV'08

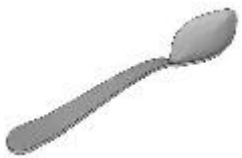



Cups

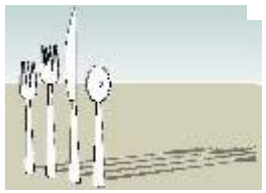

Spoons



Pots

Model Selection : Results

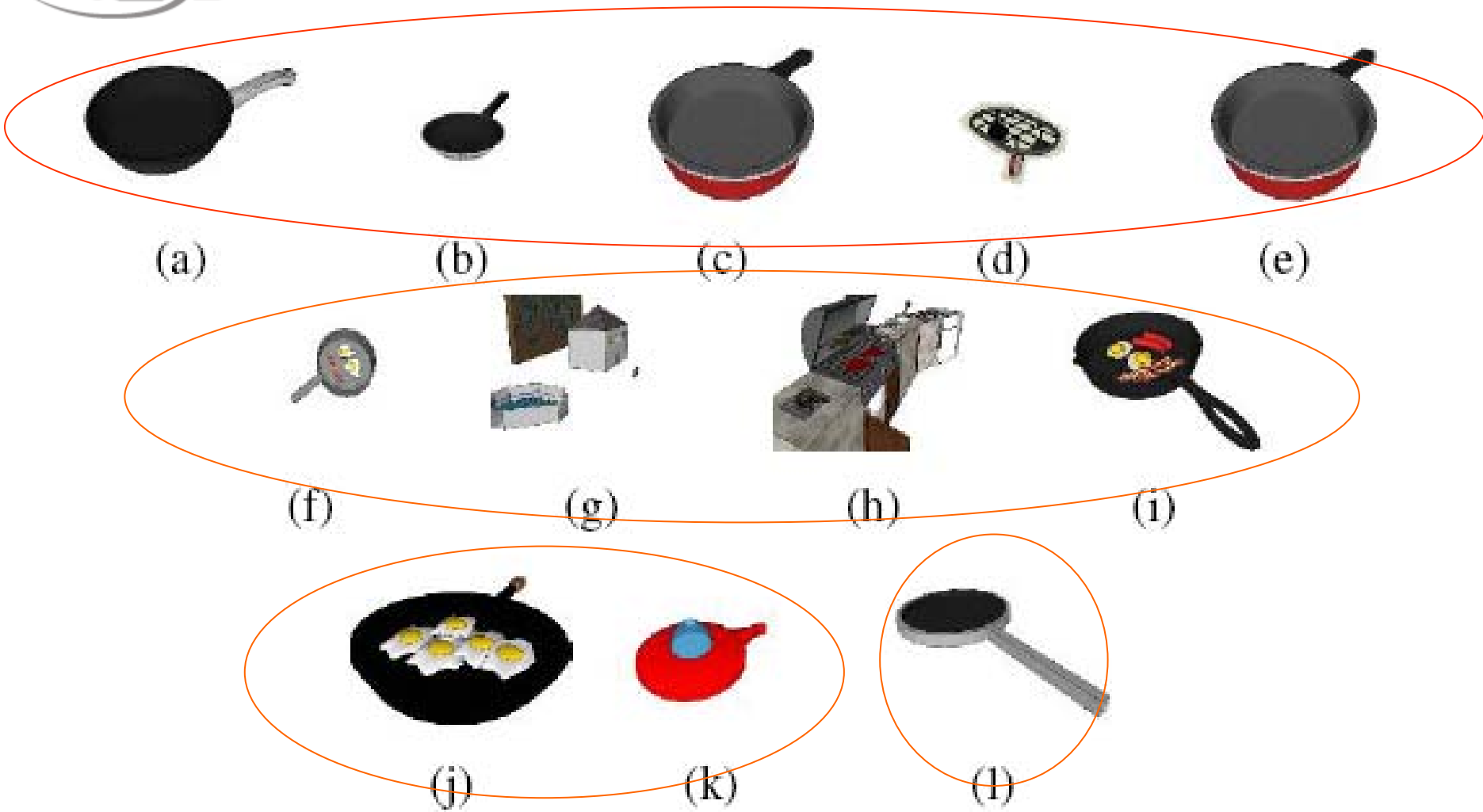

Model Selection : Results

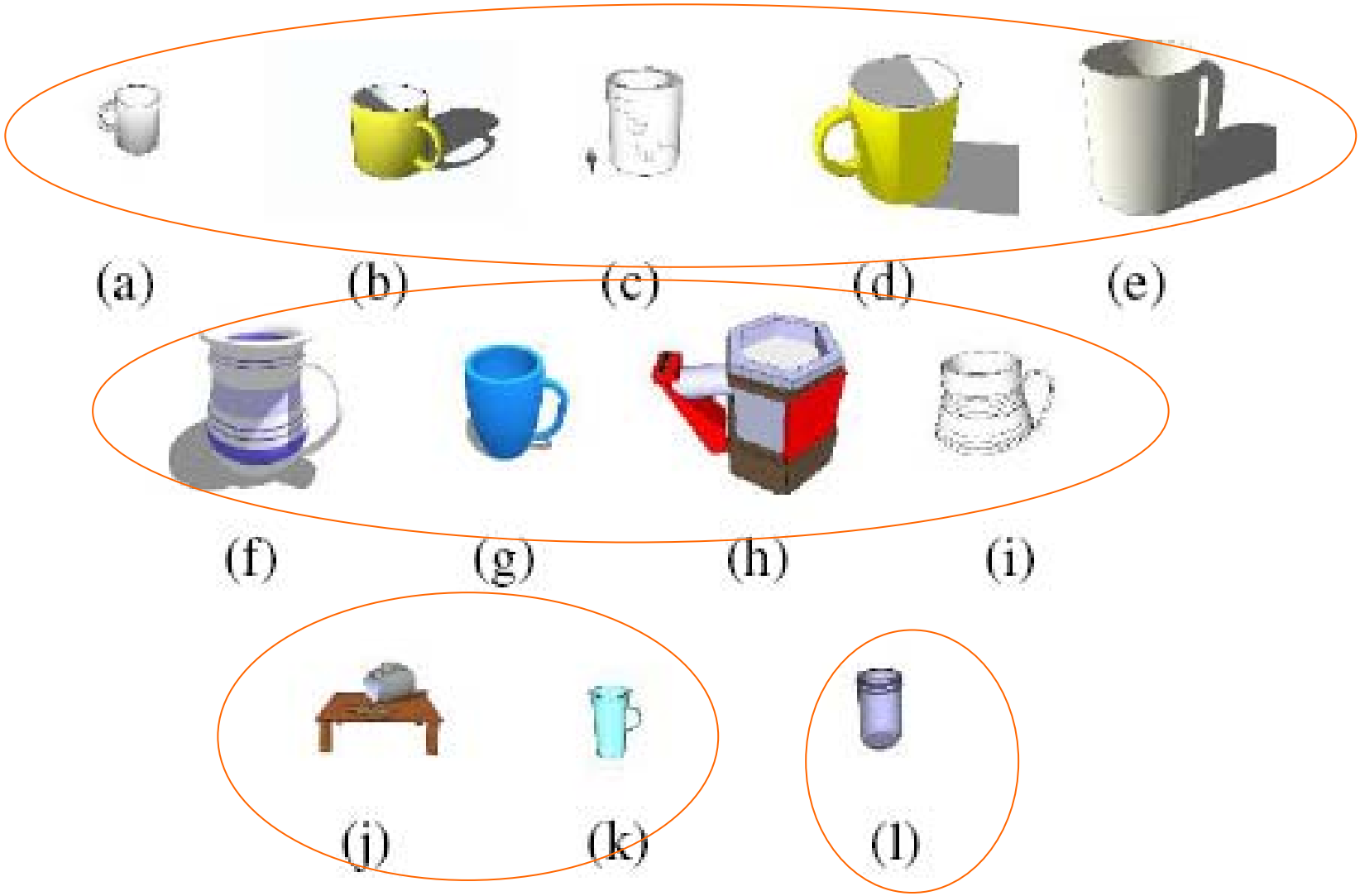

Model Selection : Results

- Inliers classification for 10 different searches: knife, spoon, fork, mug, cup, cooking pot, pan, plate, oven, milk

System output

Manually assigned errors for the search results

	Result inlier	Result outlier
Inliers	52	20
Wrong object	2	18
Scene	8	14
Similar	4	2

Automatic Alignment and Morphing

- Before morphing:
  - Initial Alignment:
    - Translation and scaling using the Shape Distribution Function used for selection (peak of histogram).
    - Pose aligned by sampling in rotation space (+/- 90° in x,y and z)
  - Optimized Alignment: Volumetric ICP (Dense point cloud needed => Add Points)

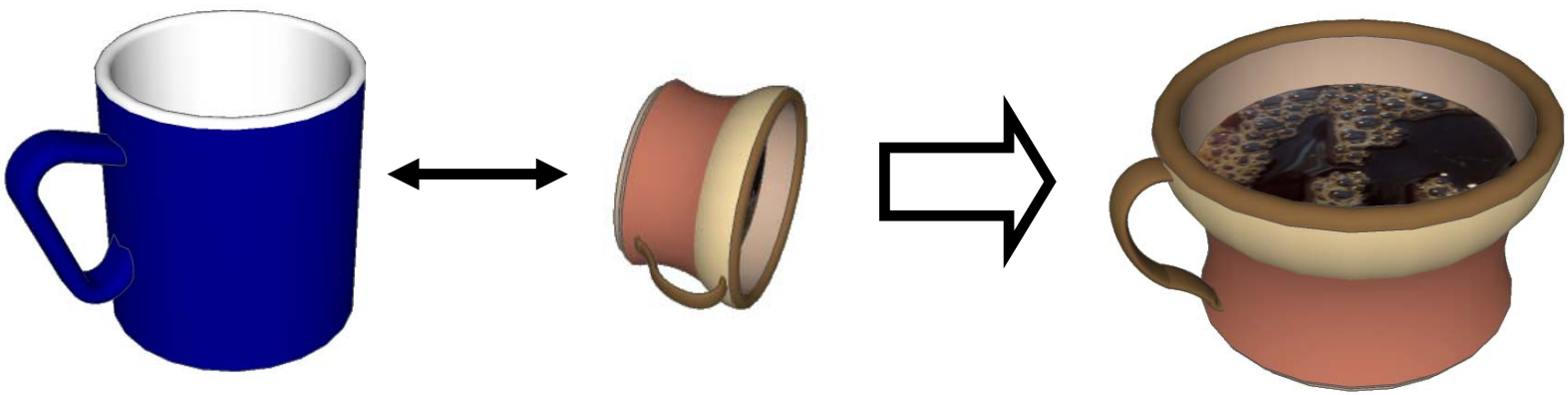

Automatic Alignment and Morphing

- Before morphing: Obtain the axis of rotational symmetry (Sherrah et al., PAMI98).

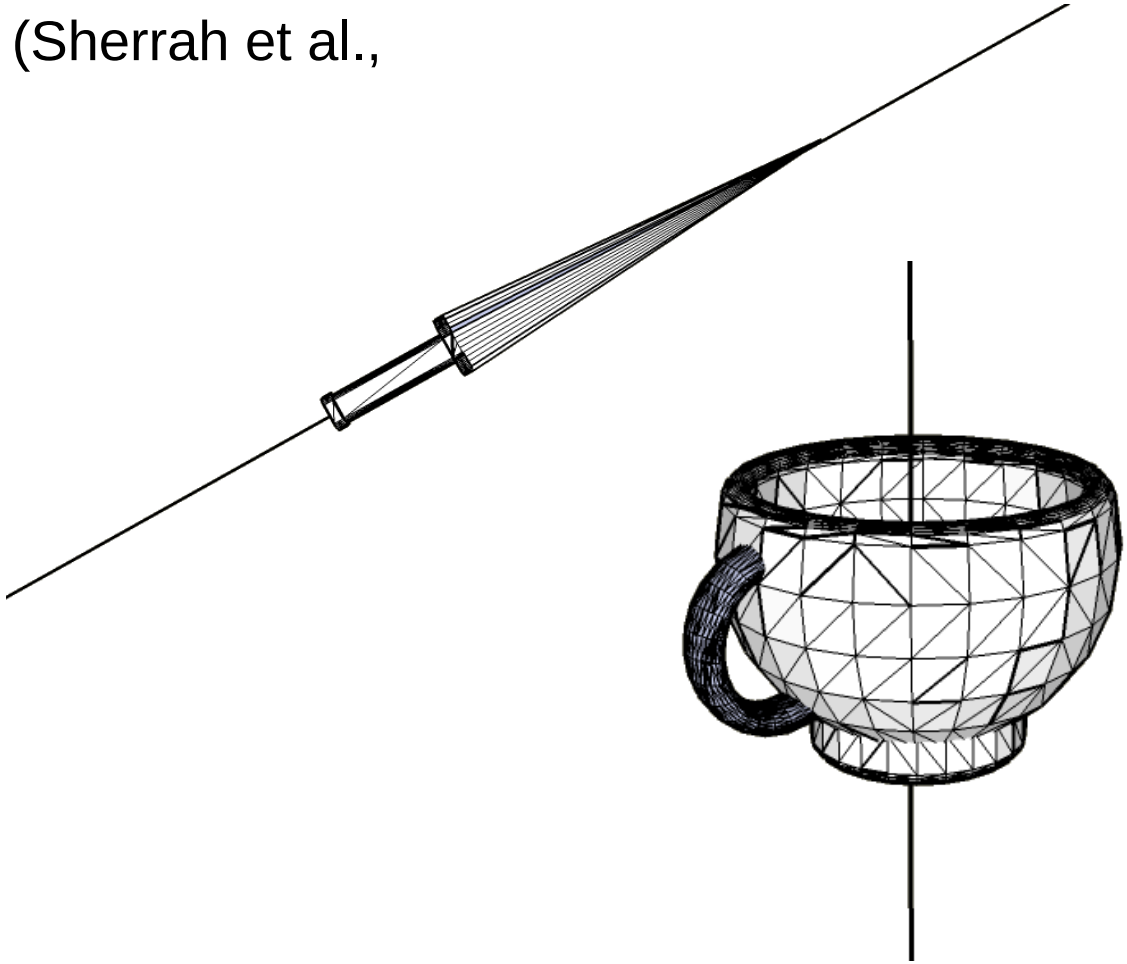

Automatic Alignment and Morphing

- Morphing:
  - Corresponding points are added on an orthogonal plane of axis of rotational symmetry to the opposite models.
  - Linear Interpolation between corresponding points

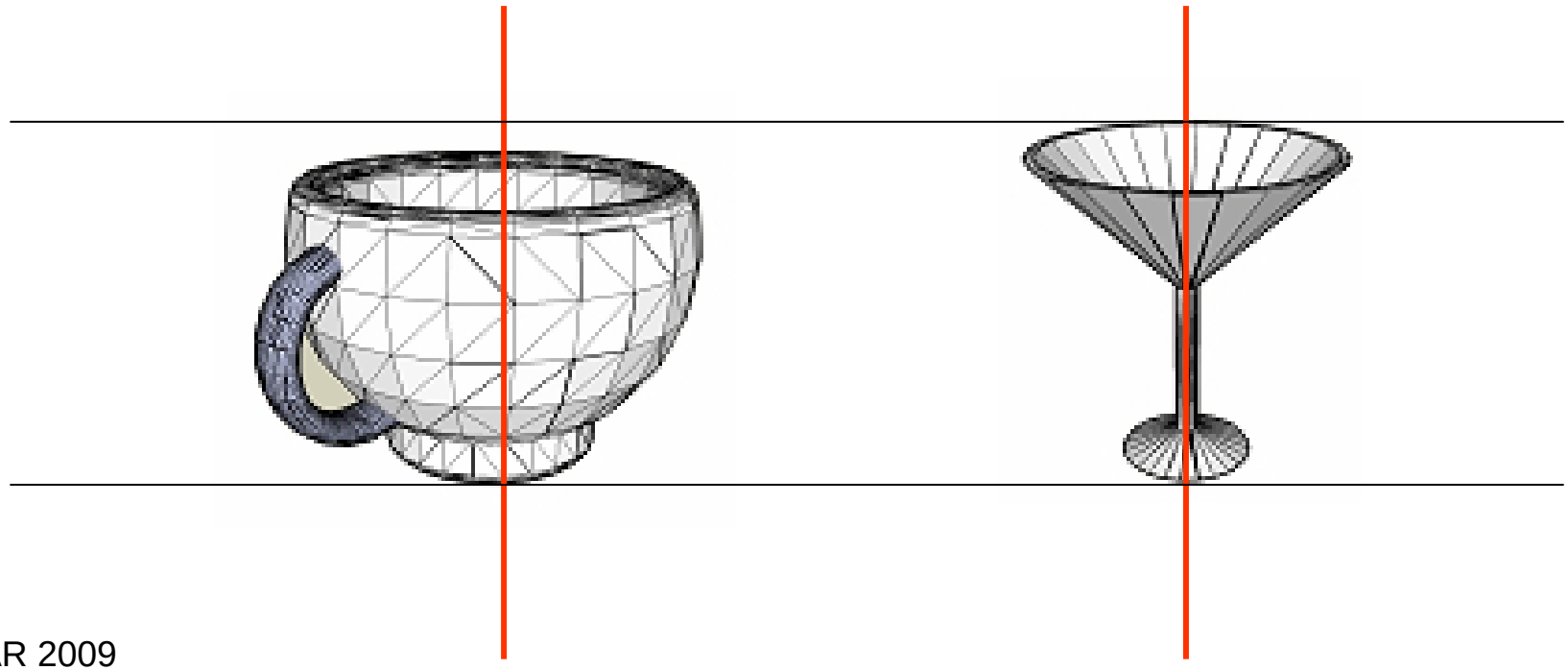

Automatic Alignment and Morphing

- Morphing:
  - Corresponding points are added on an orthogonal plane of axis of rotational symmetry to the opposite models.
  - Linear Interpolation between corresponding points

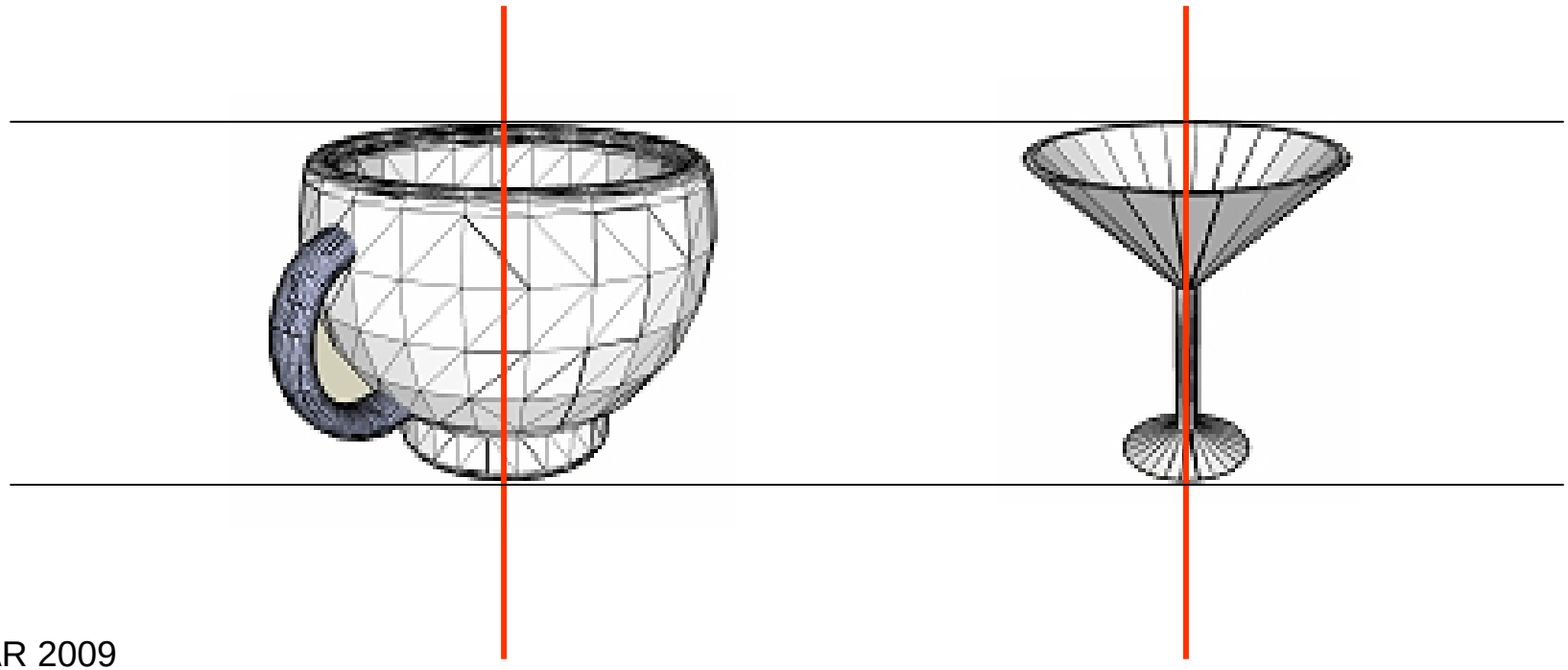

Automatic Alignment and Morphing

- Morphing:
  - Corresponding points are added on an orthogonal plane of axis of rotational symmetry to the opposite models.
  - Linear Interpolation between corresponding points

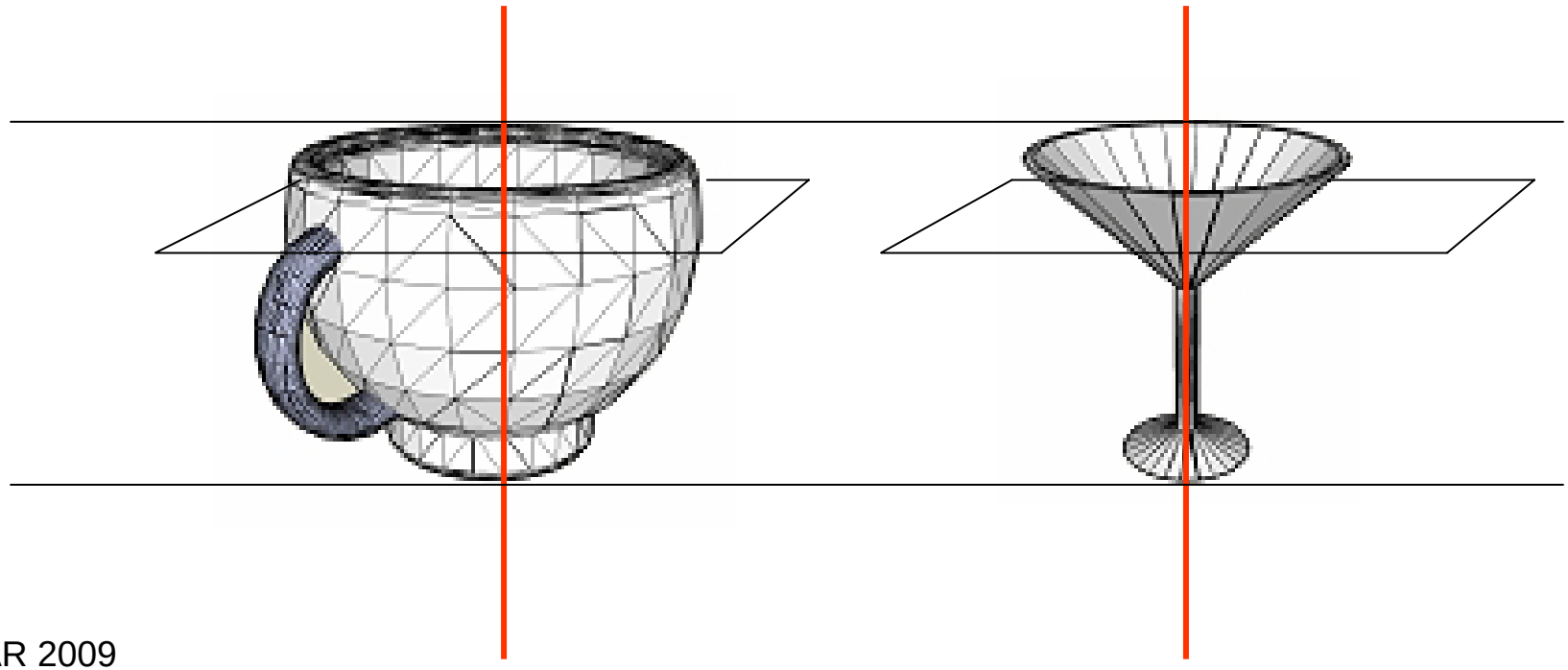

Automatic Alignment and Morphing

- Morphing:
  - Corresponding points are added on an orthogonal plane of axis of rotational symmetry to the opposite models.
  - Linear Interpolation between corresponding points

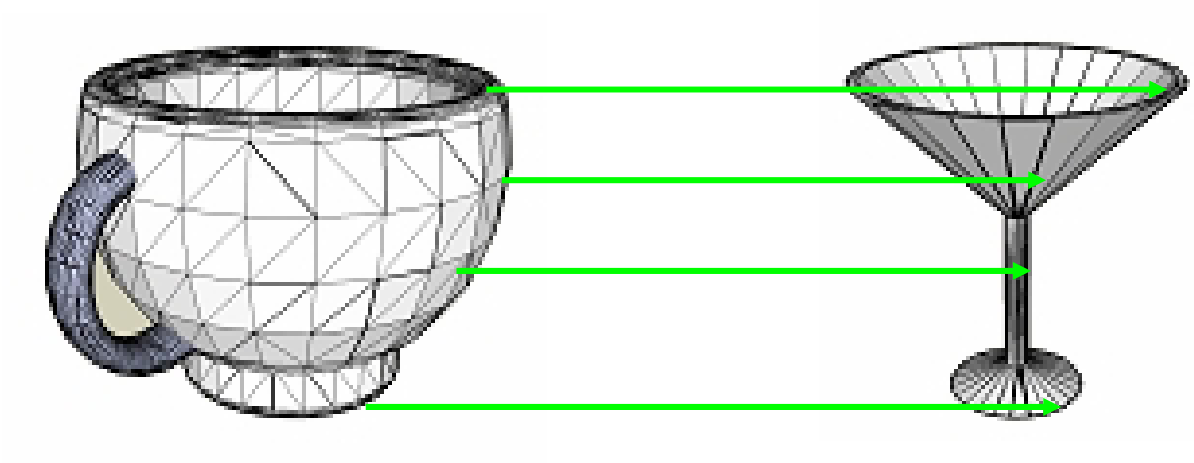

Automatic Alignment and Morphing

- Morphing:
  - Corresponding points are added on an orthogonal plane of axis of rotational symmetry to the opposite models.
  - Linear Interpolation between corresponding points

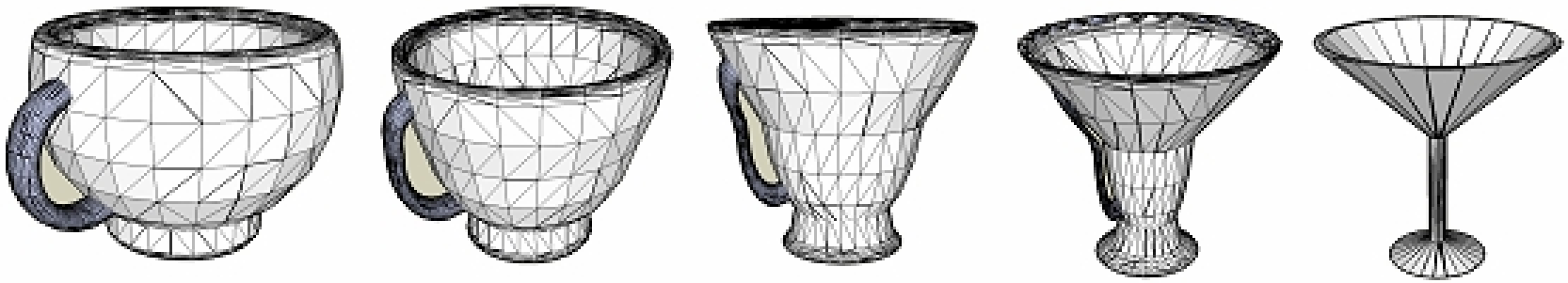

Automatic Alignment and Morphing

- Morphing: Significant increase of matching edges

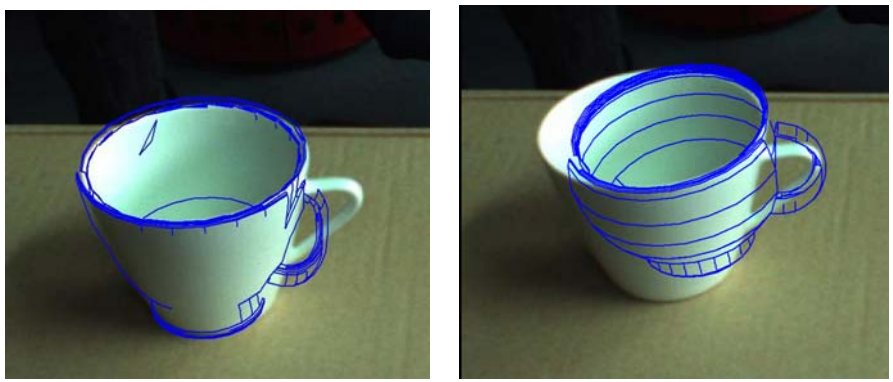

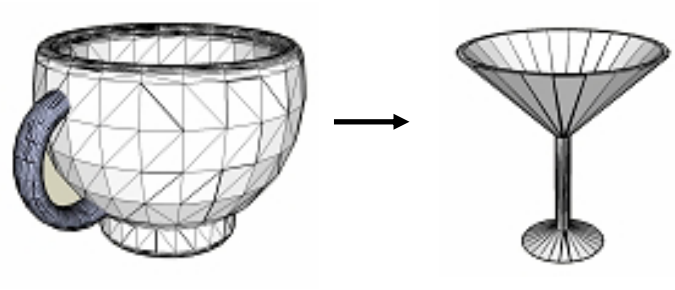

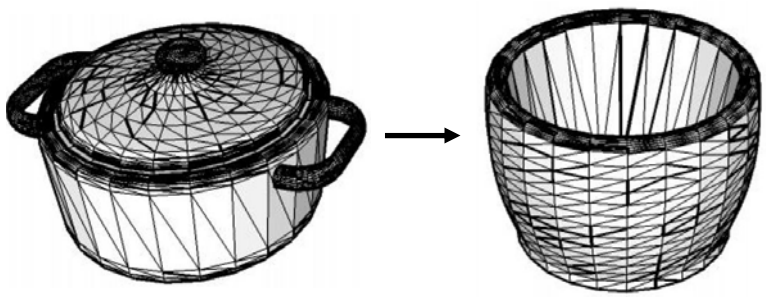

Matching

- 3D Shape Based Matching (Wiedemann et al. DAGM'08, Ulrich et al. ICRA'09)
  - Create a tree of projected models in the search space (offline)
  - Exhaustive search
  - Available in the software package HALCON

- For larger 3D models, pyramid building phase can be prohibitively slow (hours per model)

Matching

- Search space restrictions important
  - Model generation time
  - Memory usage of search tree

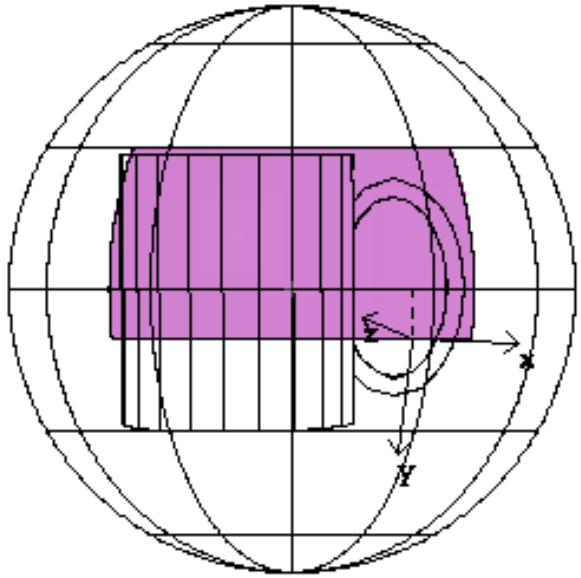

- Necessary to have an environment model

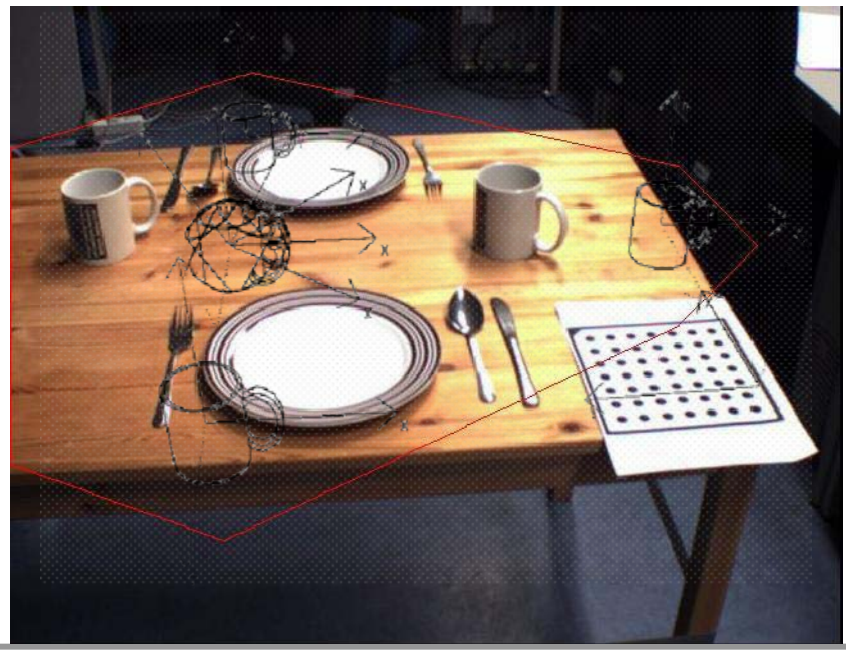

Search Space Restriction, Optimizations

- Transform 3D Euclidean Gaussian covariance ellipsoid to a spherical search space (Tavcar '09)
- Reason about the correctness of the results (Pangercic et al. ICAR'09)
- Backface Culling of larger 3D models to speed up the pyramid building phase in HALCON.

Backface Culling

- Utilize the technique of backface culling to simplify larger models.
- Cast a ray from the camera to every face.
- If the angle between this ray and the face normal is greater than β, delete it from the model (nominally β = 120 deg)

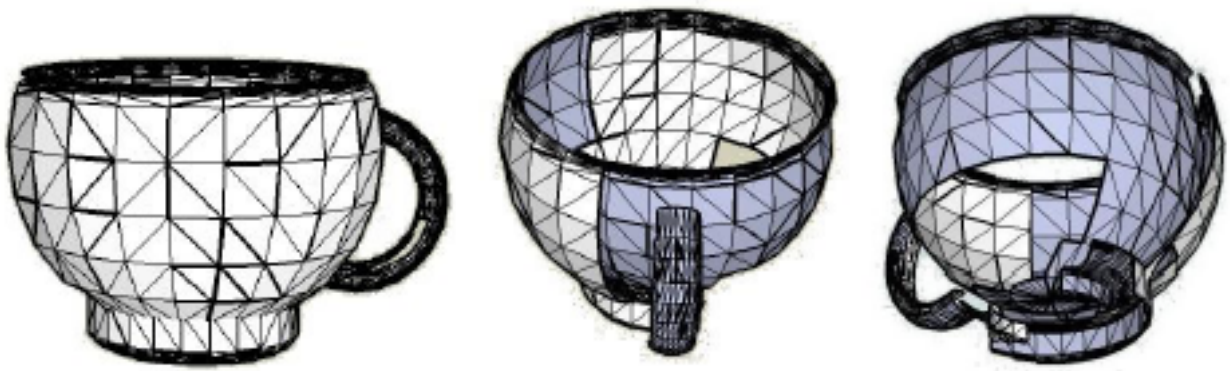

Backface Culling

- Utilize the technique of backface culling to simplify larger models.
- Cast a ray from the camera to every face.
- If the angle between this ray and the face normal is greater than β, delete it from the model (nominally β = 120 deg)

Backface Culling : Pyramid building time

Model	Original Model	Model after Culling
	904 faces,113.7s	447 faces,29.5s
	1892 faces,87.48s	844 faces,25.5s
	344 faces,33.74s	179 faces,10.14s
	1534 faces,60.393s	791 faces,38.924s
	3552 faces,794.5s	1786 faces,188.2s

Scaling correction

- Solution: Stereo setup, Triangulate Model

System Results

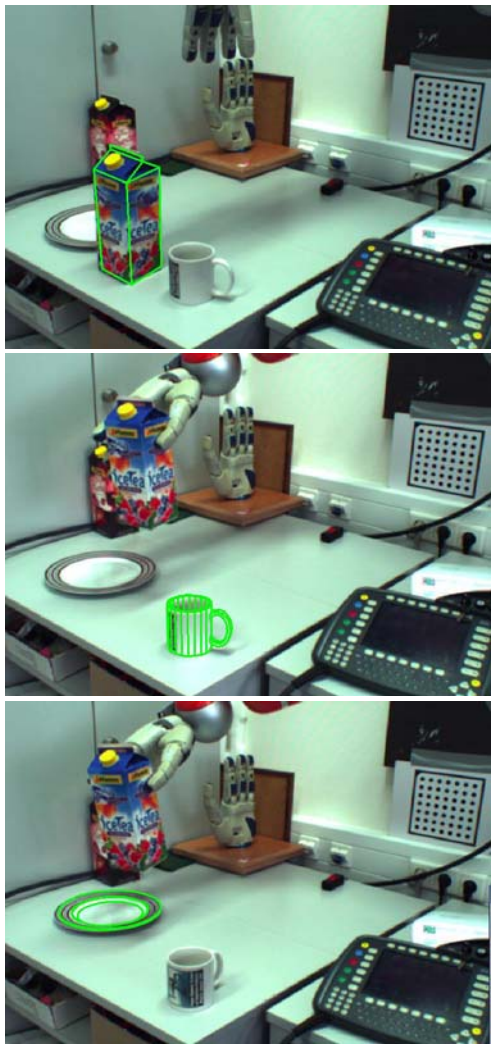

- Manipulating two objects, locating three
- Give user the mug, pour ice tea into it, put the ice-tea-box on the plate

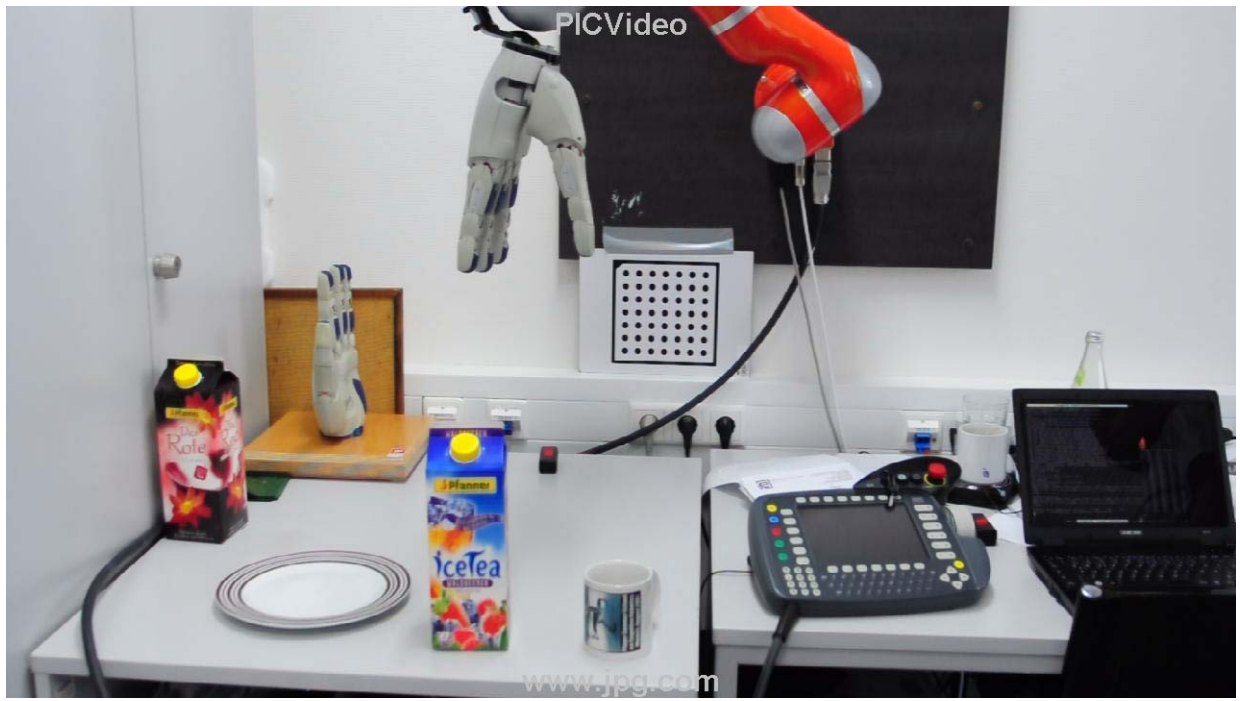

System Results

- Finding the Plate Model:

Model(Faces)	Time Model	Time Search	Matches/Score
Plate 0(188)	201 s	0.65s	1/0.98
Plate 10(22)	76 s	0.20s	1/0.97
Plate 9(258)	296 s	1.89s	1/0.86
Plate 4(332)	112 s	0.67s	1/0.83
Plate 7(120)	223 s	1.09s	1/0.78
Plate 3(118)	80 s	0.32s	1/0.76
Plate 8(626)	326 s	1.24s	0/0.70

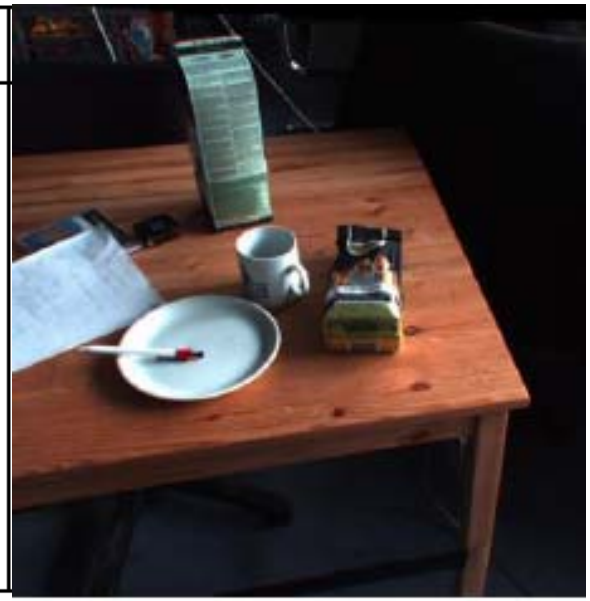

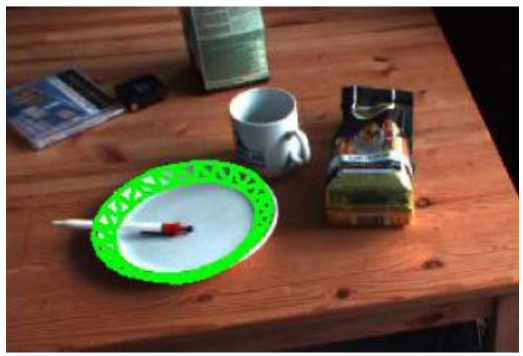

Discussion

- Drawbacks:
  - Calculation time for model generation
  - Incompleteness of databases
  - Ambiguities of Shape

- Advantages
  - Complete reconstruction, simulation of the object possible
  - High probability of available models in kitchen environment
  - Little prerequisites: only a search string and a environment model

Future Work

- Optimize the 3D object detection system for inexact models, anisotropic scaling, and occlusion.
- Improve the morphing and automatically detect for ‘unrealistic’ newly created models.
- Train for manipulating ‘unseen’ objects.

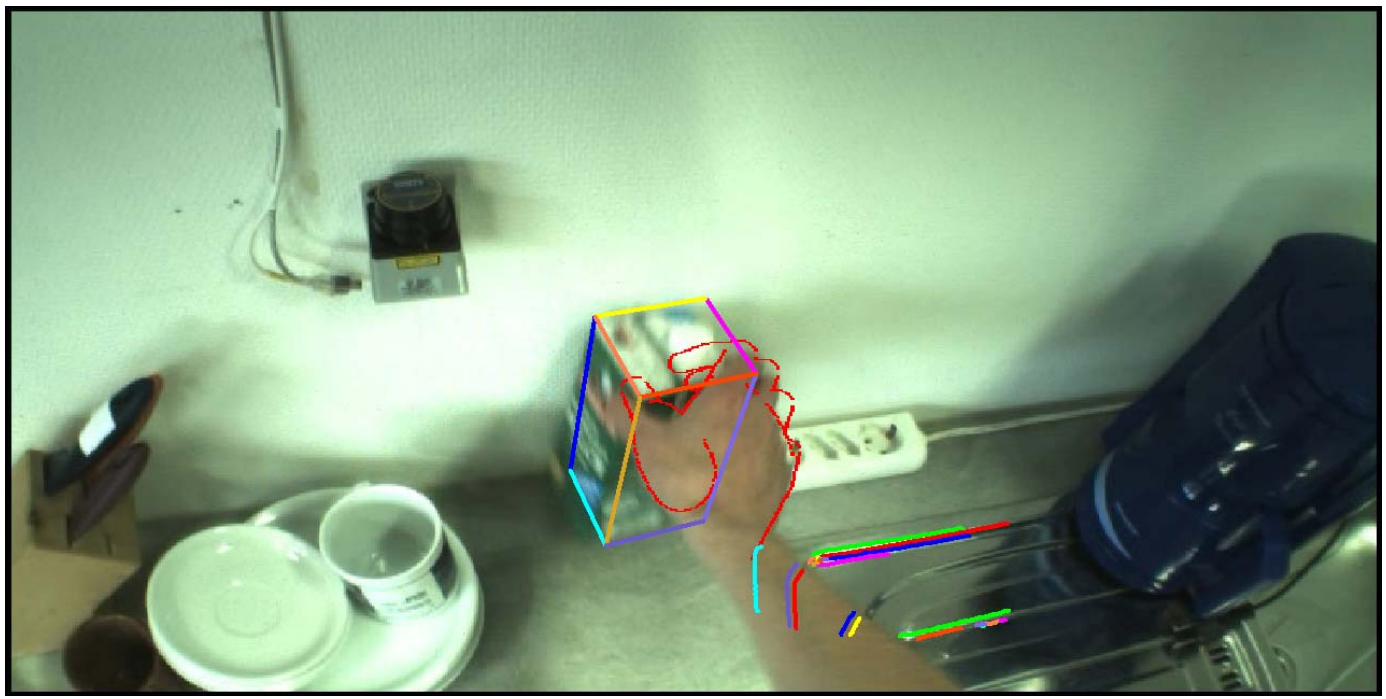

Thank you for your attention!

This work was enabled by CoTeSys, Cluster of Excellence and MVTec GmbH.